3.0kW Dual LLC Evaluation Board

EVAL_3kW_2LLC_C7
TO220
TO247

Di Domenico Francesco (IFAT PMM ACDC AE)
Zechner Florian (IFAT PMM ACDC AE)

Rev 1.0

Table of Contents

1 General Description

2 Efficiency Results

3 Design Concept

Copyright © Infineon Technologies AG 2016. All rights reserved.

Table of Contents

1 General Description

2 Efficiency Results

3 Design Concept

Copyright © Infineon Technologies AG 2016. All rights reserved.

General

Description:

The **"EVAL_3kW_2LLC_C7"** - Evaluation Board shows how to design a dual phase LLC system solution of a Telecom / Industrial SMPS with the target to meet **highest efficiency** requirements. On this purpose there has been applied latest CoolMOS™ technology IPP60R040C7 600V Power MOSFET on the primary side and OptiMOS™ Low Voltage Power MOSFET in SuperSO8 BSC093N15NS5 in the synchronous rectification secondary stage, in combination with QR CoolSET™ ICE2QR2280Z, 1EDI60N12AF EiceDRIVER™ high voltage, high speed driver ICs for MOSFETs, Low Side Gate Driver 2EDN7524R and digital LLC Controller XMC4400.

Summary of Features:

- Output voltage: 44 – 58 VDC
- Output current max: 55A
- Peak efficiency @ 50% load > 98.5%
- Efficiency @ 10% load > 97%

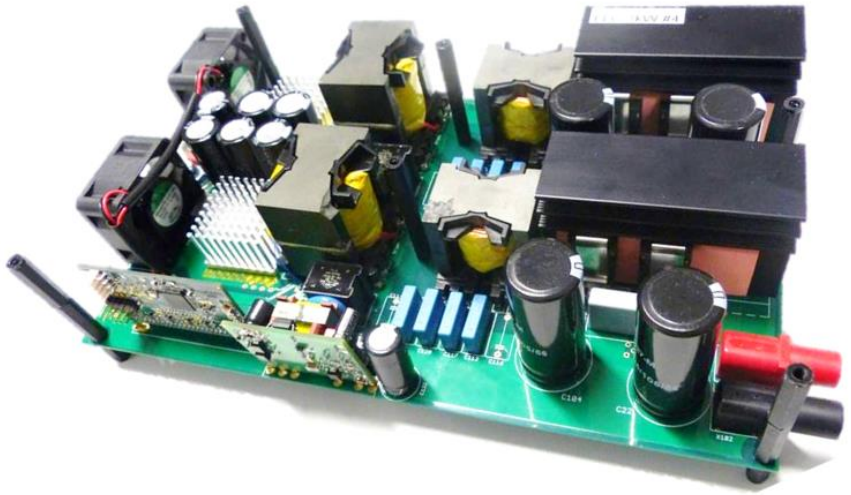

The following variants are available:

- EVAL_3kW_2LLC_C7 version with CoolMOS™ C7 **TO-220**, IPP60R040C7, EVAL_3kW_2LLC_C7_220
- EVAL_3kW_2LLC_C7 version with CoolMOS™ C7 **TO-247**, IPW60R040C7, EVAL_3kW_2LLC_C7_247

Copyright © Infineon Technologies AG 2016. All rights reserved.

Example of System Understanding: Infineon
Demo Solution for highest efficiency HV DC/DC stage

Half Bridge LLC with synchronous rectification in center tap configuration	
V_{in}	350 - 400 V_{DC}
V_{in_nom}	380 V_{DC}
V_{out}	44 - 58 V_{DC}
I_{out}	55 A
P_o	3 kW
C_r	66 nF
L_r	12 uH
L_m	62 uH

Primary HV MOSFETs
CoolMOS™ IPP60R040C7
Reduced Gate Charge (Q_g)
- Reduced E_{off}
- High body diode ruggedness

SR MOSFETs
OptiMOS™ BSC093N15NS5
New generation
- Best FOM $R_{DS(on)}$ x Q_g
- Best FOM $R_{DS(on)}$ x Q_{oss}

Transformer
SP-PQ 40/40 core

Resonant inductor
SP-PQ 35/35 core

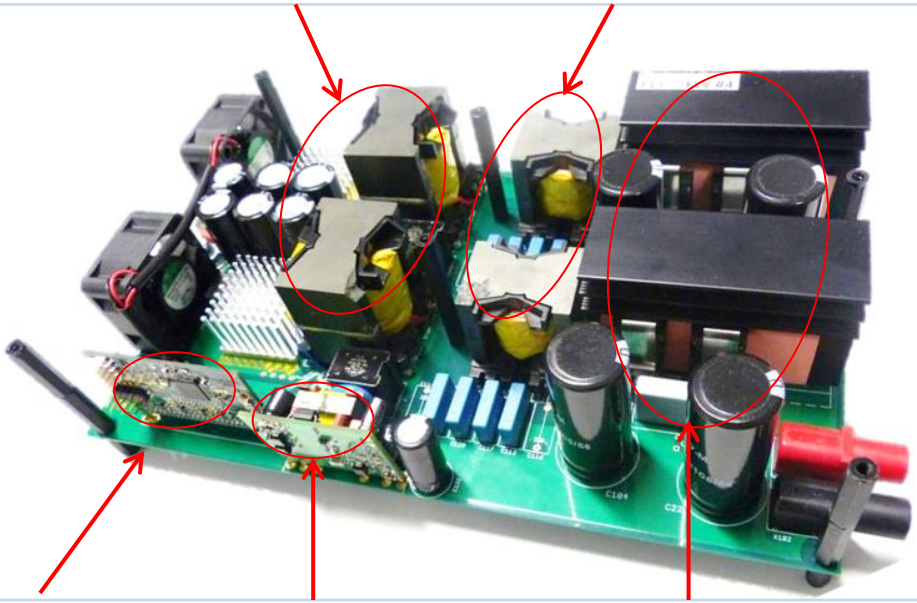

LLC controller
Digital XMC4400

Bias QR Flyback controller
ICE2QR2280Z

HV MOSFETs
IPP60R040C7 TO-220
IPP60R040C7 TO-247

Copyright © Infineon Technologies AG 2016. All rights reserved.

Digital Control Board

Infineon`s solution to control the 3kW dual phase LLC Evaluation Board

Digital

XMC4400-F64K512 AB

Summary of Features:

- ARM® Cortex™-M4, 120MHz, incl. single cycle DSP MAC and floating point unit (FPU)
- 8-channel DMA + dedicated DMAs for USB and Ethernet
- USB 2.0 full-speed on-the-go
- CPU Frequency: 120MHz
- eFlash: 512kB including hardware ECC
- 80kB SRAM
- Package: PG-LQFP-64

Target Applications:

Motor control

- Position detection
- IO devices
- HMI
- Solar inverters
- SMPS
- Sense & control systems
- PLC
- UPS
- Light networks

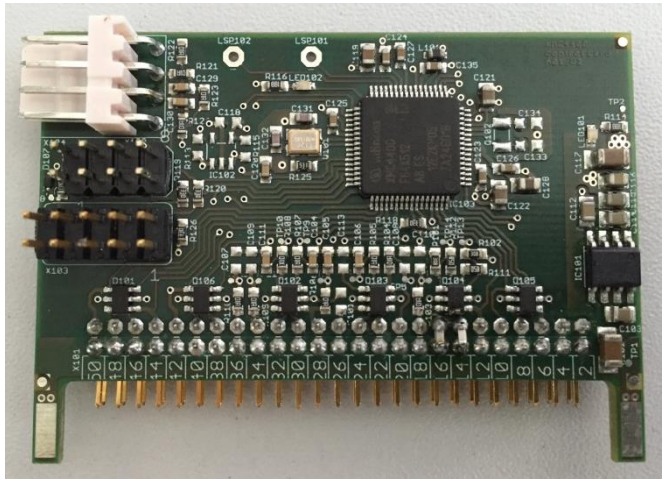



Copyright © Infineon Technologies AG 2016. All rights reserved.

Main Power Board Schematic

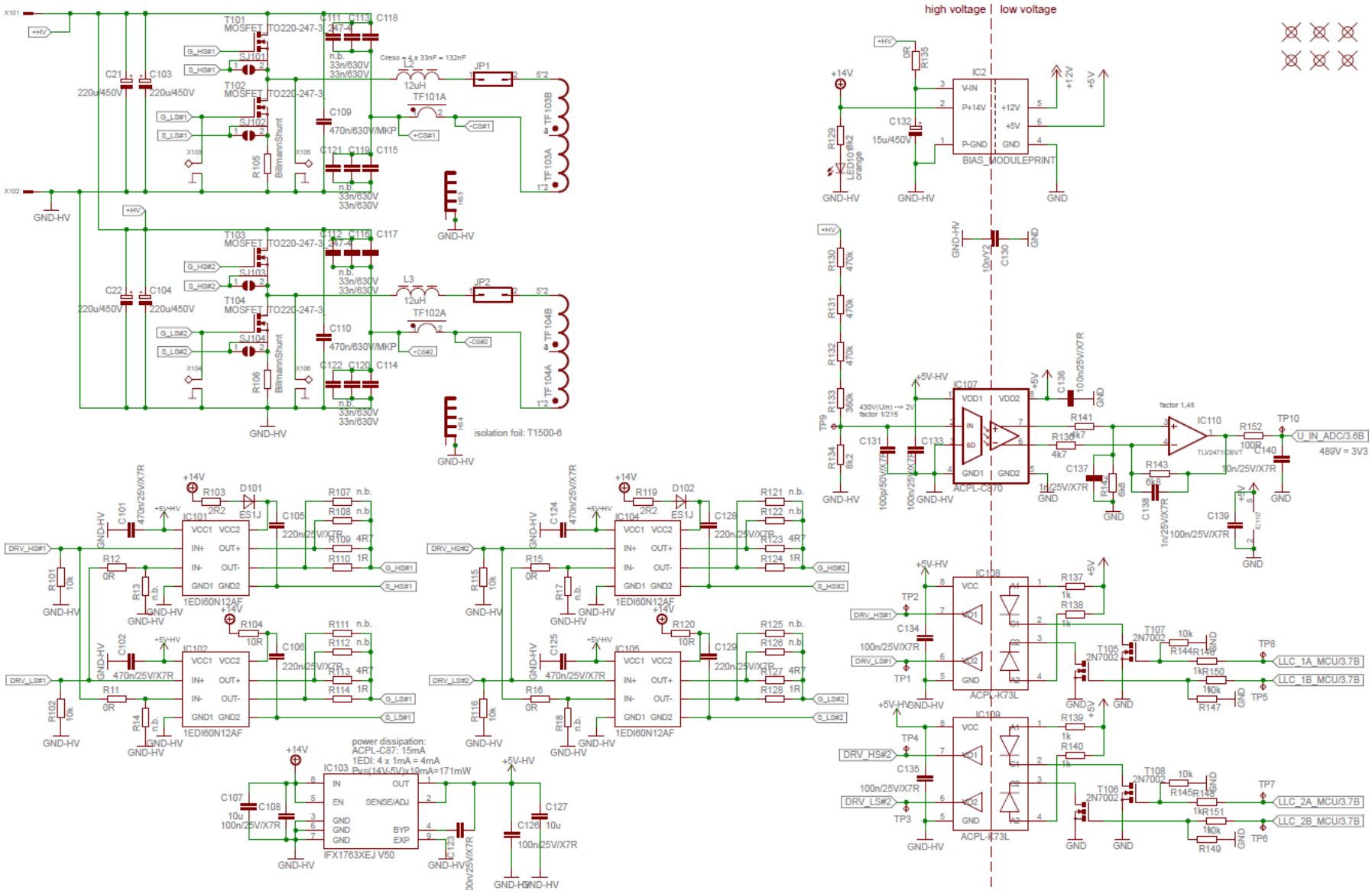

Copyright © Infineon Technologies AG 2016. All rights reserved.

Digital Control Board Schematic

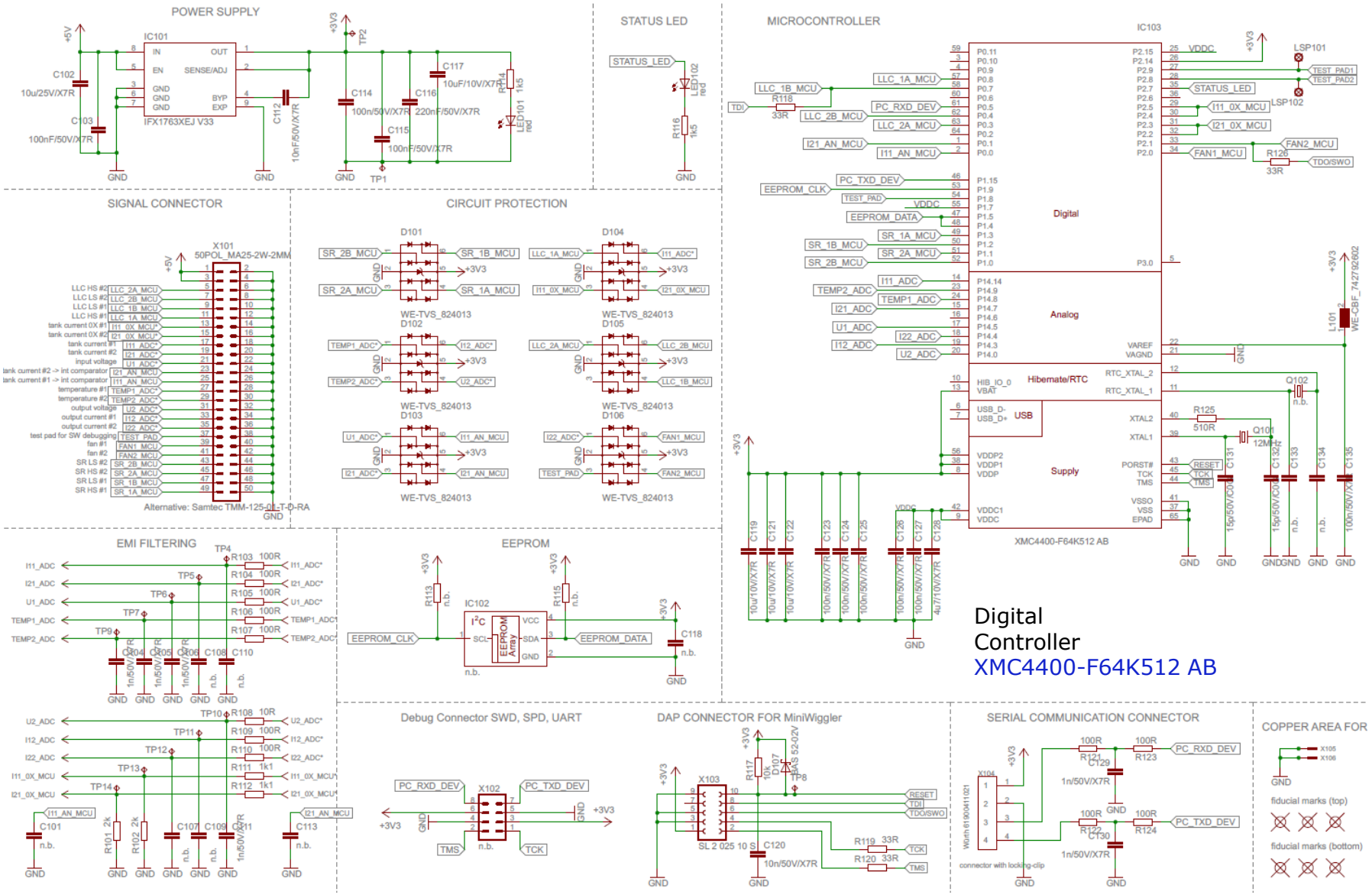

Copyright © Infineon Technologies AG 2016. All rights reserved.

Bias Board Schematic

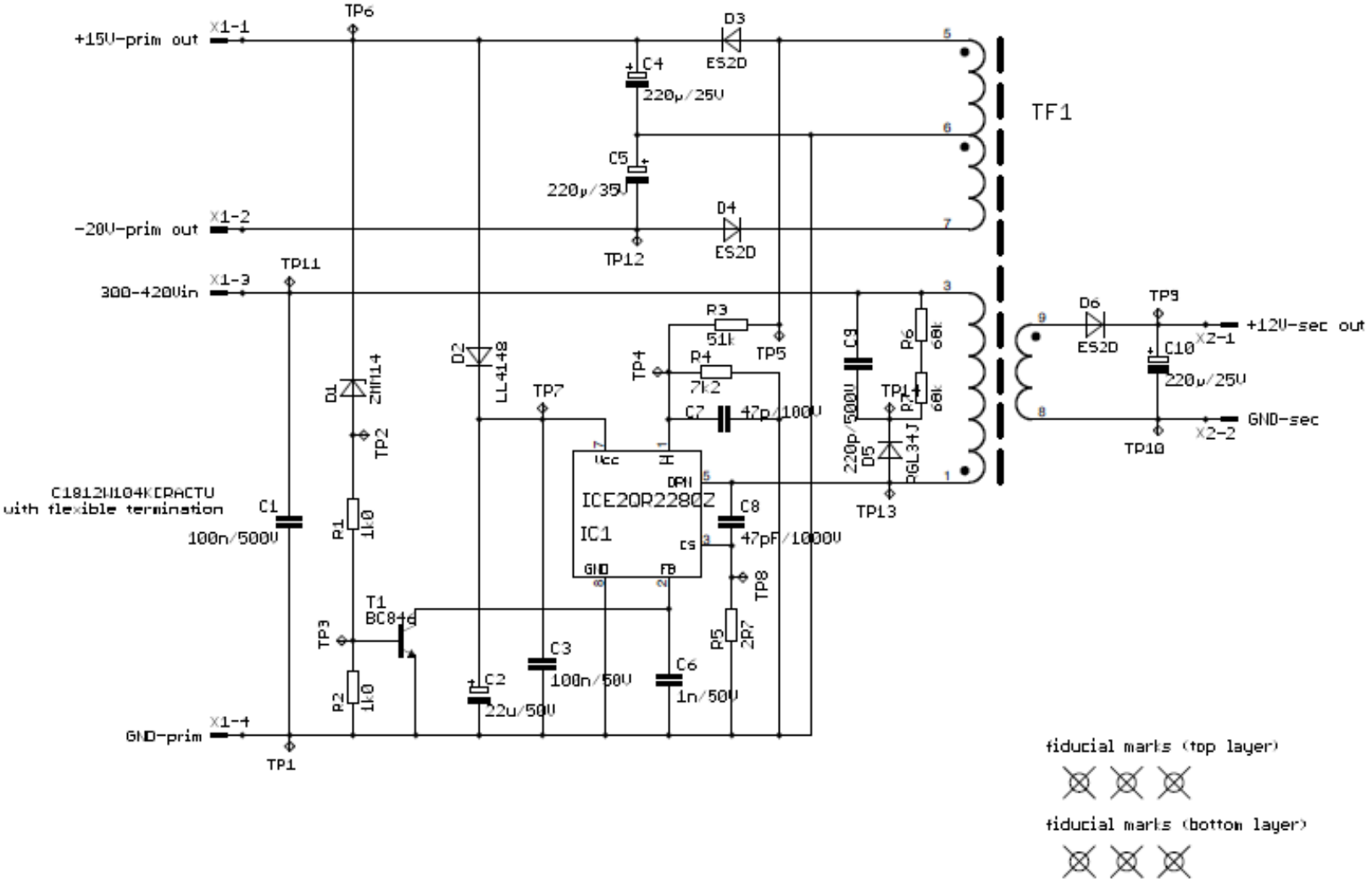

Copyright © Infineon Technologies AG 2016. All rights reserved.

Connection instruction

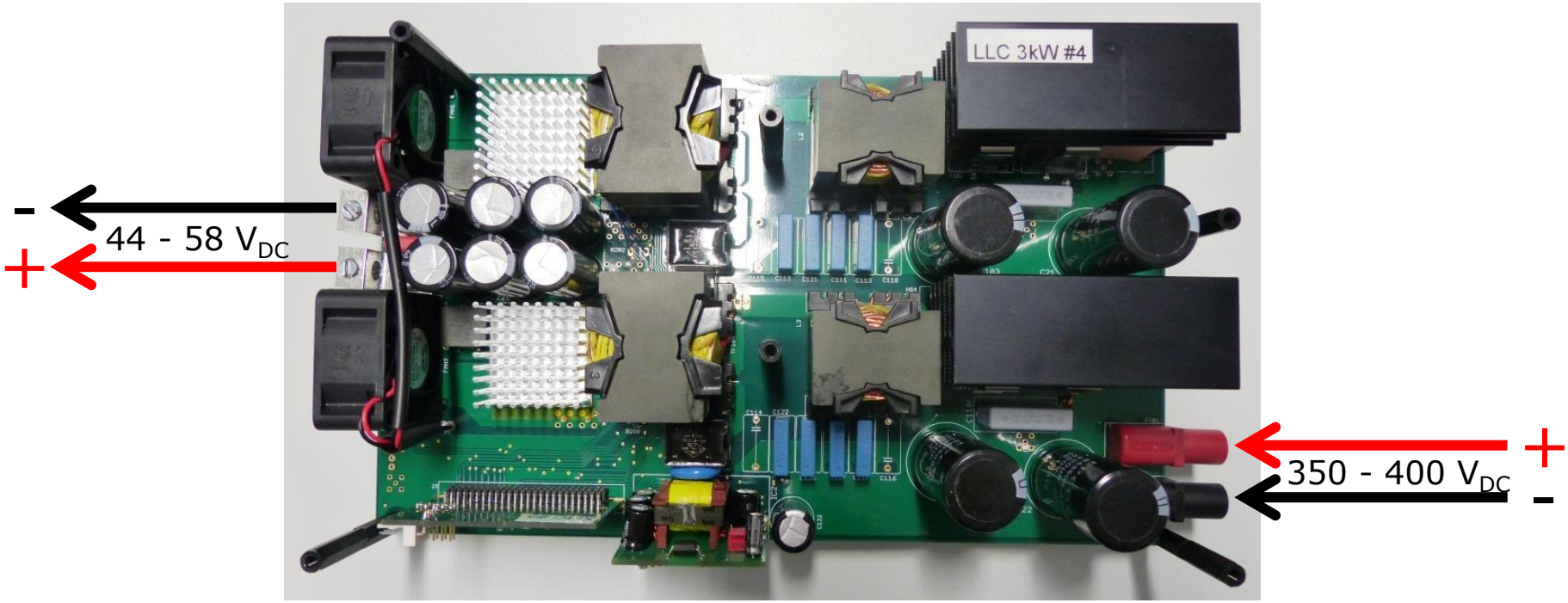

Copyright © Infineon Technologies AG 2016. All rights reserved.

Table of Contents

1 General Description

2 Efficiency Results

3 Design Concept

Copyright © Infineon Technologies AG 2016. All rights reserved.

Efficiency Plot measured with IPP60R040C7 / IPW60R040C7

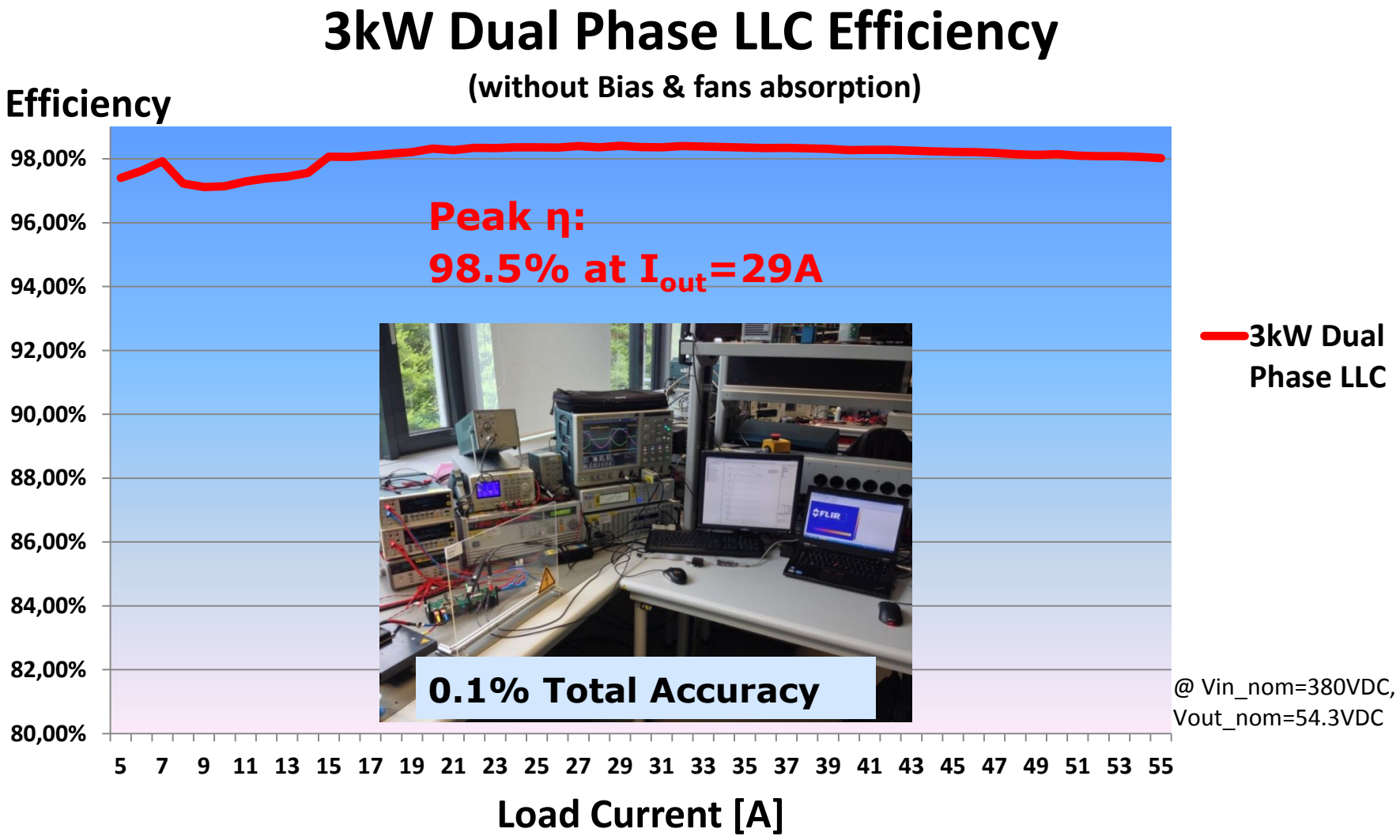

Copyright © Infineon Technologies AG 2016. All rights reserved.

Table of Contents

1 General Description

2 Efficiency Results

3 Design Concept

Copyright © Infineon Technologies AG 2016. All rights reserved.

Design Concept

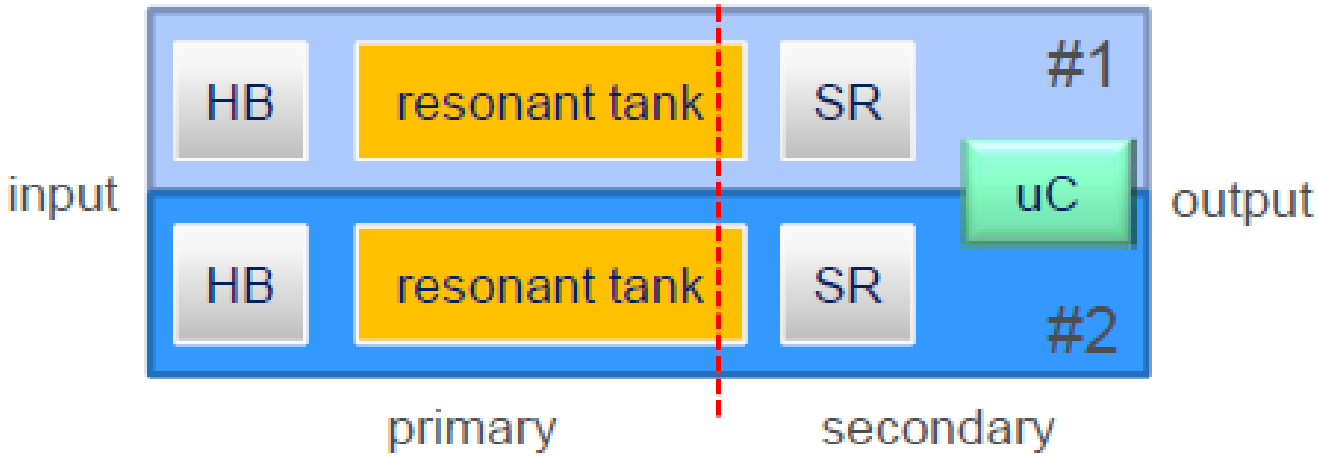

Copyright © Infineon Technologies AG 2016. All rights reserved.

Basic components positioning in the PCB

4 layer PCB, 2oz copper (70um)

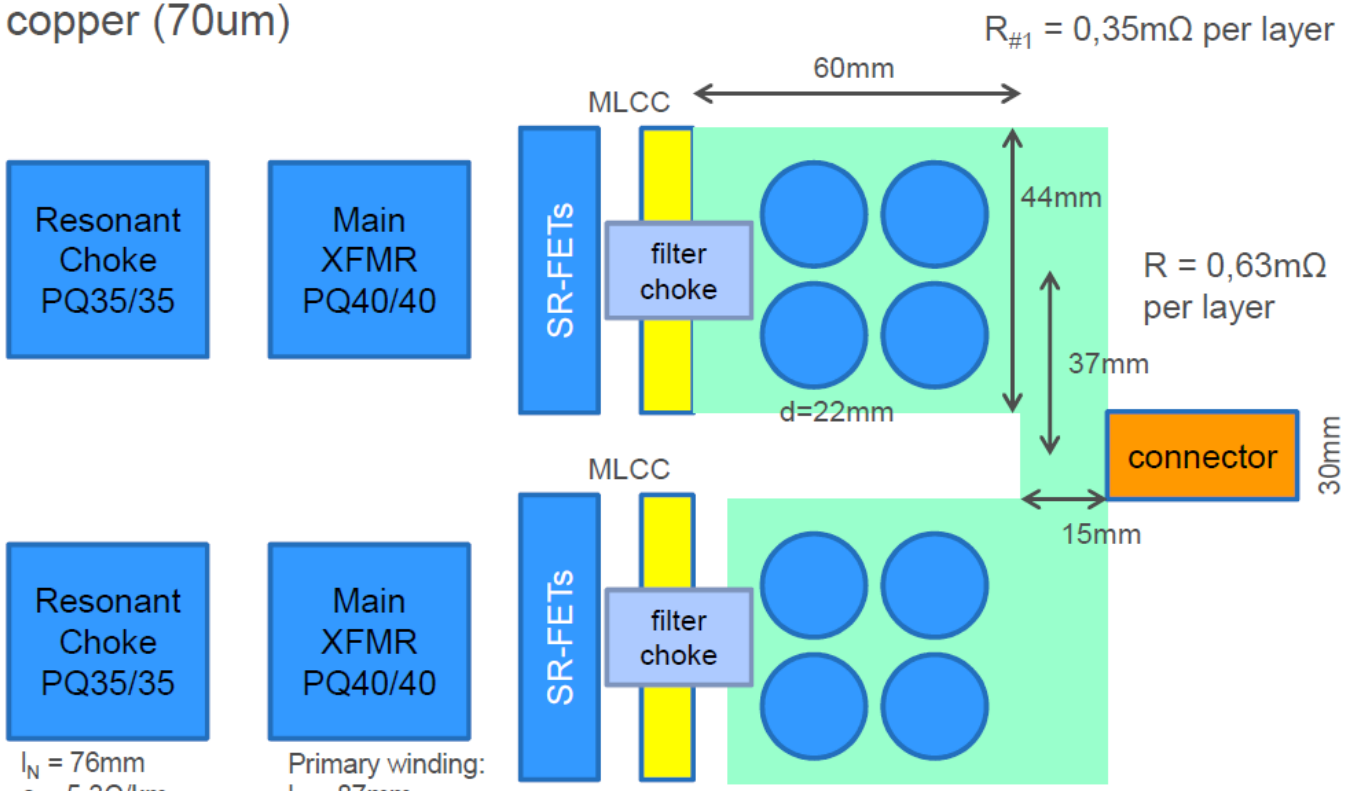

Copyright © Infineon Technologies AG 2016. All rights reserved.

Two Daughter Boards

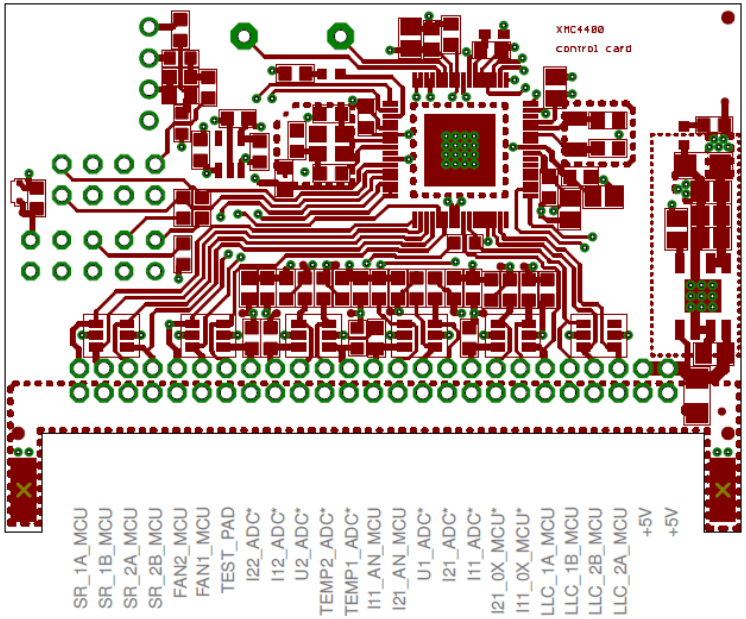

Microcontroller Board

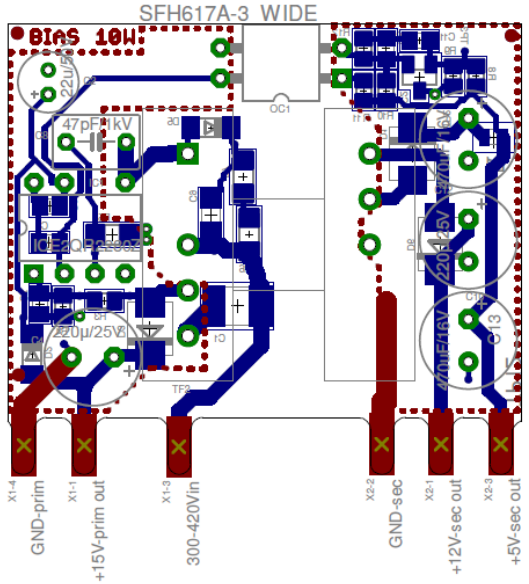

Auxiliary Converter Board

Copyright © Infineon Technologies AG 2016. All rights reserved.

Final shape and overall dimensions

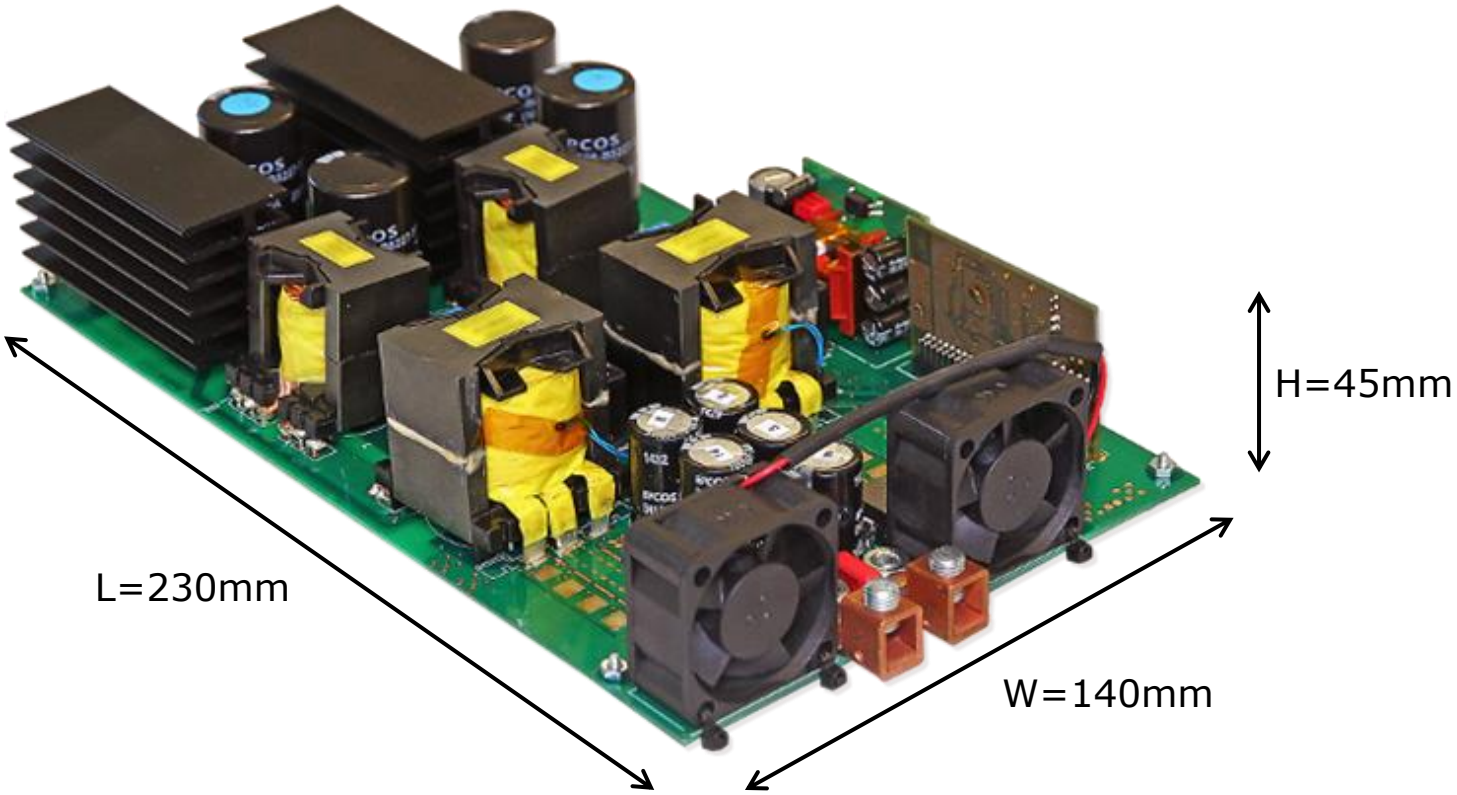

Copyright © Infineon Technologies AG 2016. All rights reserved.

Evaluation Board
EVAL_3kW_2LLC_C7

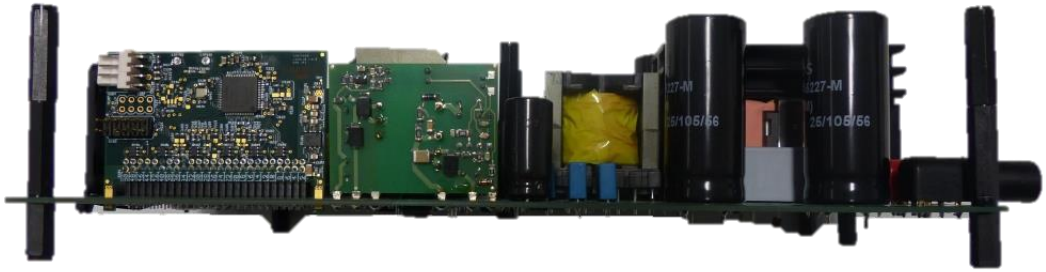

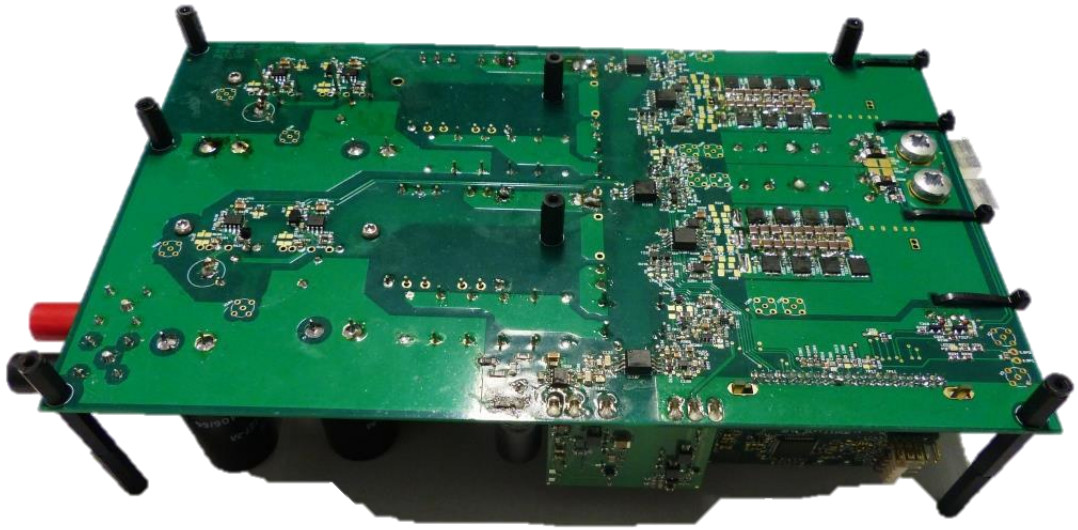

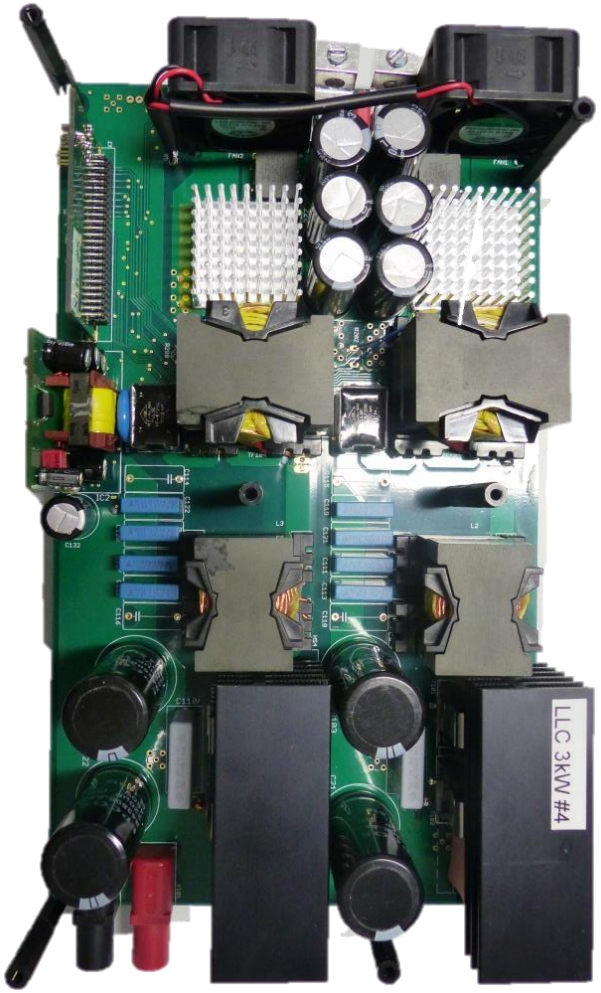

Copyright © Infineon Technologies AG 2016. All rights reserved.

Support Slides
3KW Dual LLC Evaluation Board

Evaluation Board Page

- Technical Description
- Datasheets
- Parameters
- Related material
- Videos

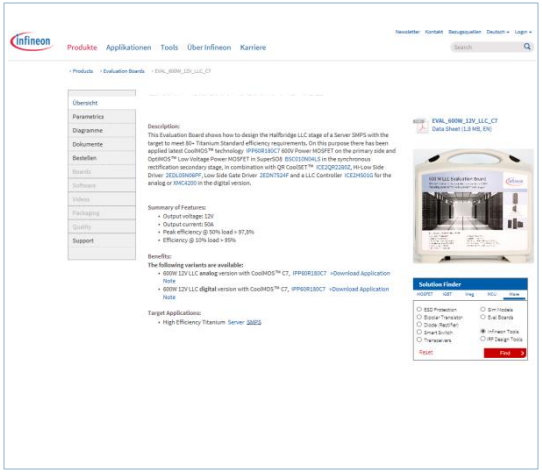

- EVAL_3kW_2LLC_C7

Product Family Pages

- Product Brief
- Application Notes
- Selection Guides
- Datasheets and Portfolio
- Videos
- Simulation Models

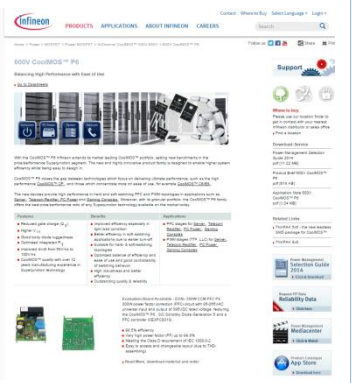

- IPP60R040C7
- BSC093N15NS5
- XMC4400-F64K512 AB
- 2EDN7524R
- ICE2QR2280Z
- 1EDI60N12AF
- IFX1763XEJ V50
- IFX1763XEJ V33

Copyright © Infineon Technologies AG 2014. All rights reserved.



Part of your life. Part of tomorrow.

Infineon